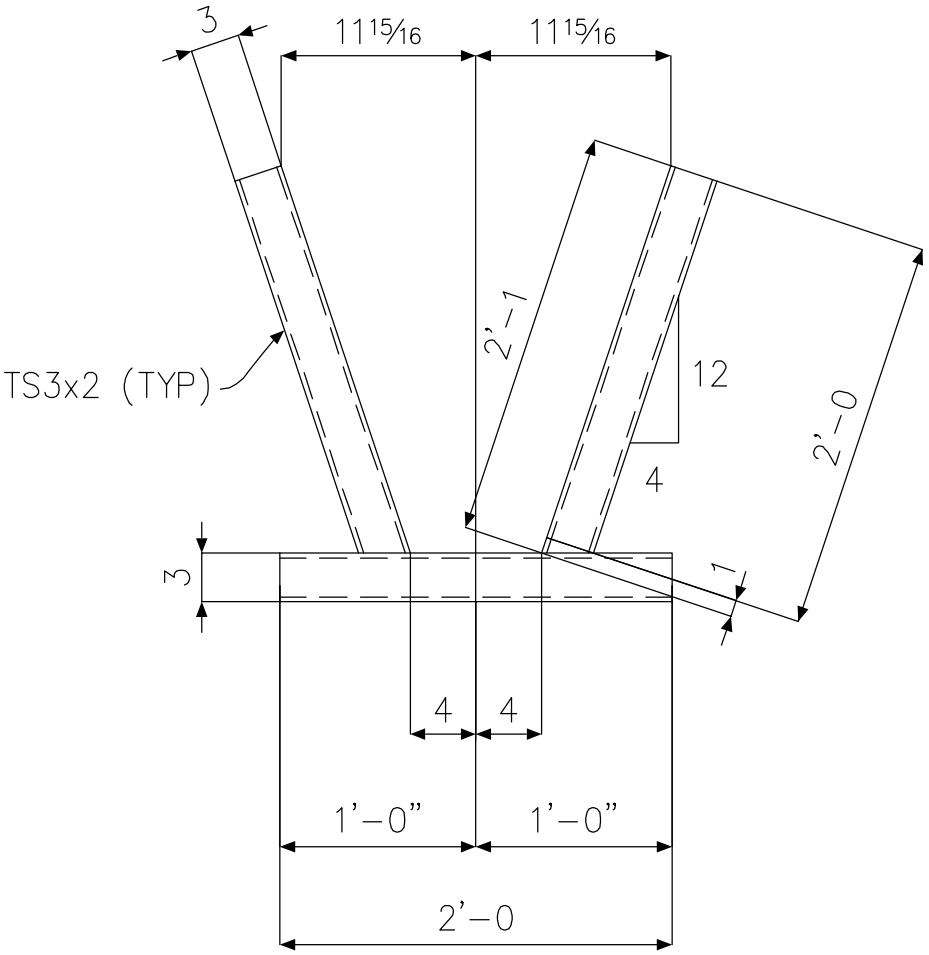
3
11 15/16
11 15/16
TS3x2 (TYP)
2'-1
12
4
2'-0
3
1
4
4
1'-0"
1'-0"
2'-0

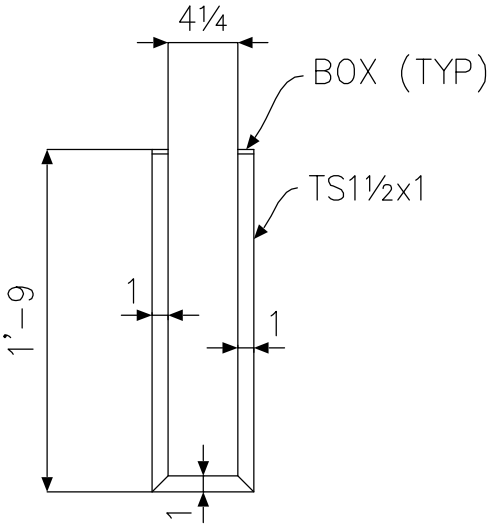
4 1/4
BOX (TYP)
TS1 1/2x1
1'-9
1
1
1